On linear output regulation: data-driven, hybrid, optimal, and more!

Sergio Galeani
joint work with
(data-driven) D. Carnevale, M. Sassano, A. Serrani

HYBRID DYNAMICAL SYSTEMS:
OPTIMIZATION, STABILITY AND APPLICATIONS,
Trento, January 9-11, 2017

Outline

Section 1

The output regulation problem: Internal vs External Model

The output regulation problem

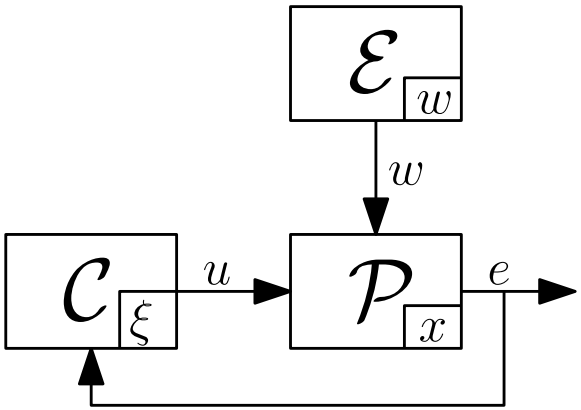

Problem (Output regulation)

Find, if possible, an error feedback compensator $\mathcal{C}$ such that

- *the closed loop system is exponentially stable*
- *the output e is asymptotically regulated to zero*

Several flavours:

- *full information* vs. *error feedback*
- *hybrid dynamics*
- *known* vs *unknown* plant and/or exosystem
- dealing with *fat plants*: control allocation, optimal steady-state maps

The output regulation problem

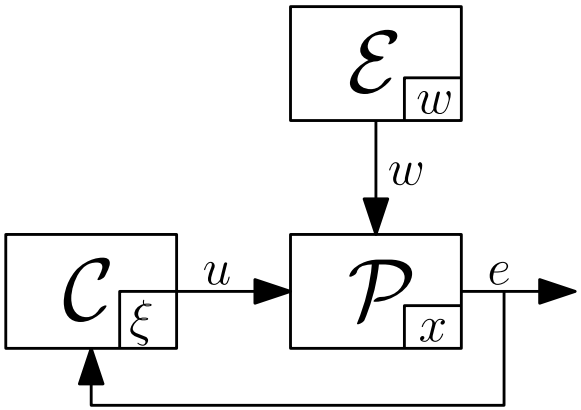

Problem (Output regulation)

Find, if possible, an error feedback compensator $\mathcal{C}$ such that

- *the closed loop system is exponentially stable*
- *the output e is asymptotically regulated to zero*

Key observations:

1. when using error feedback, **steady-state is in open-loop**
2. $\mathcal{C}$ makes $\mathcal{E}$ **unobservable** from e
3. by linearity, stability and regulation can be studied **separately**

Internal Model vs *External Model*

Internal Model

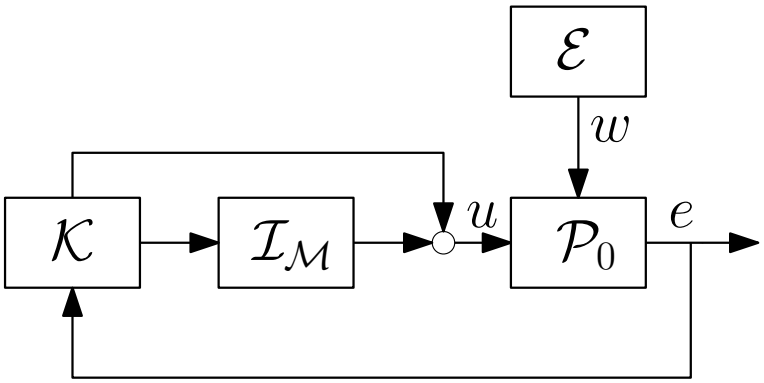

External Model

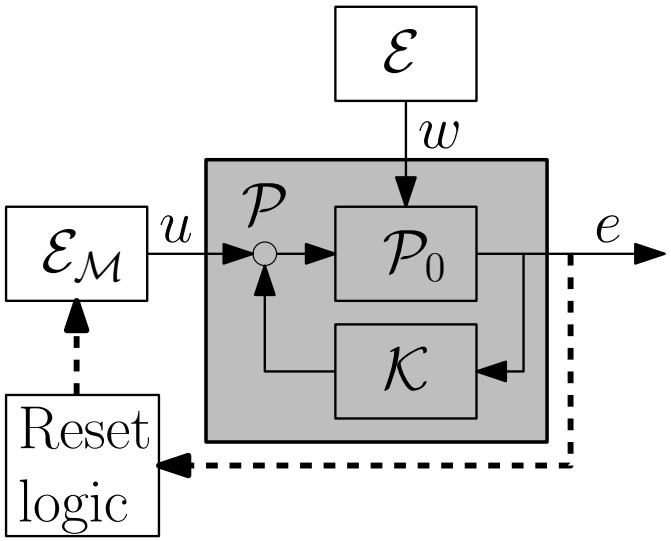

Internal Model vs *External Model*

Internal Model

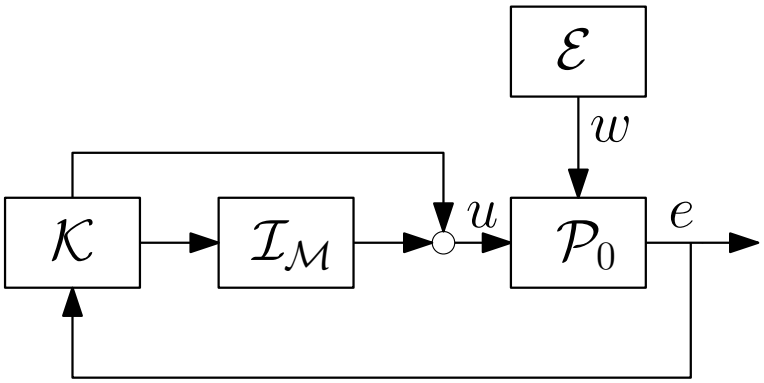

External Model

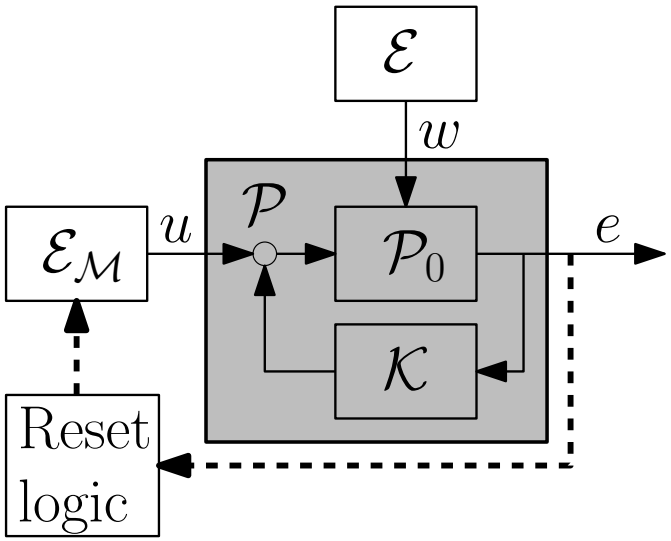

Problem (Output regulation via External Models for Unknown Plants)

Find, if possible, a data-driven compensator $\mathcal{E}_{\mathcal{M}}$ and Reset Logic such that

- *the closed loop system is exponentially stable*
- *the output is asymptotically regulated to zero*

without any knowledge of the (pre-stabilized) plant $\mathcal{P}$ subject to arbitrary parameter uncertainties

NOTE: a **robust** output regulation problem!

Dynamics of (Feed-forward) compensator $\mathcal{E}_{\mathcal{M}}$ based on the Internal Model Principle!

A look forward: three steps towards data-driven OR

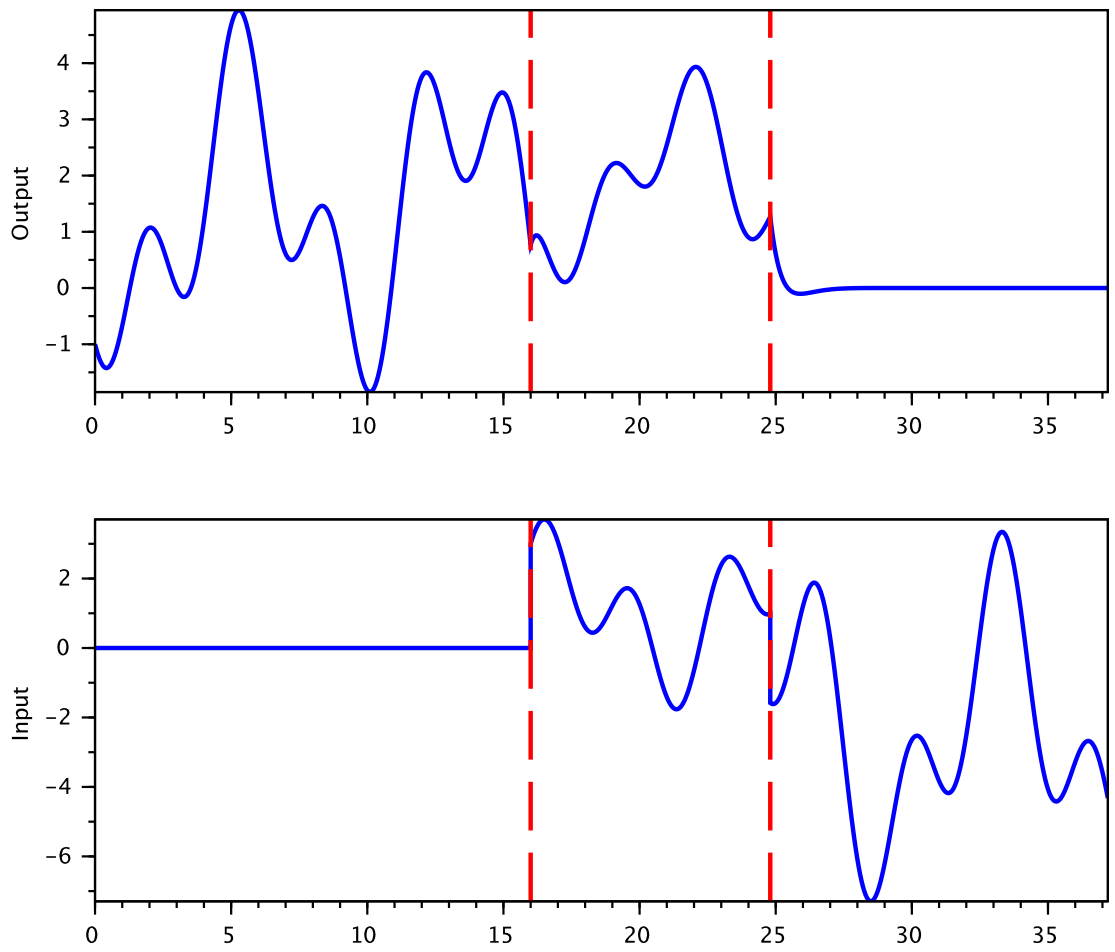

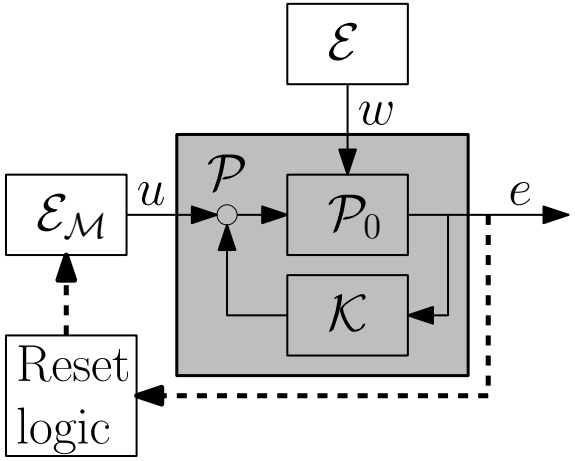

- $u = 0$: learn the effect $\check{e}$ of w on e
- random reset of $\mathcal{E}_{\mathcal{M}}$: learn the effect of u on $\bar{e} := e - \check{e}$
- smart reset $\mathcal{E}_{\mathcal{M}}$: achieve OR!

Classic setting and Francis equations

- LTI **exosystem** $\mathcal{E}$: $\dot{w} = Sw$
- LTI **plant** $\mathcal{P}_0$: $\begin{cases} \dot{x} = Ax + Bu + Pw, \\ e = Cx + Du + Qw \end{cases}$

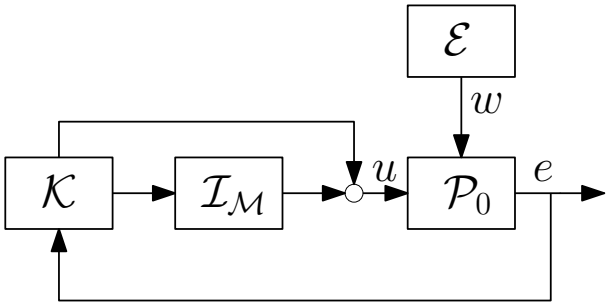

Assumptions

1. S is semi-simple with $\operatorname{spec}(S) = \{0, \pm\jmath\omega_1, \ldots, \pm\jmath\omega_r\}$
2. (A, B) stabilizable, (A, C) detectable
3. $\operatorname{rank}\begin{bmatrix} A - \jmath\omega_h & B \\ C & D \end{bmatrix} = n + p,\ h = 0, 1, \ldots, r$, satisfied by all (A, B, C, D)

For properly designed $\mathcal{K}$, $\mathcal{I}_{\mathcal{M}}$:

- Well defined **steady-state solution:** $\begin{bmatrix} x_{ss} \\ u_{ss} \end{bmatrix} = \begin{bmatrix} \Pi \\ \Gamma \end{bmatrix} w$
- **Francis equations:** *(invariance and internal model)*

$$\Pi S = A\Pi + B\Gamma + P\,, \qquad \Sigma S = F\Sigma\,,$$
$$0 = C\Pi + D\Gamma + Q\,, \qquad \Gamma = H\Sigma\,,$$

where $(F, G, H, 0)$ are the matrices of the overall error feedback controller

Section 2

Data-driven External Model based regulators: the non hybrid case

External model - preliminary design

- LTI **exosystem** $\mathcal{E}$: $\dot{w} = Sw$
- LTI **plant** $\mathcal{P}$: $\begin{cases} \dot{x} = Ax + Bu + Pw, \\ e = Cx + Du + Qw \end{cases}$
- LTI **external model** $\mathcal{E}_{\mathcal{M}}$: $\begin{cases} \dot{x}_M = A_M x_M, & A_M = I_p \otimes A_m, \\ y_M = C_M x_M, & C_M = F(I_p \otimes C_m), \end{cases}$

  with (A_m, C_m) observable and $\mu_{A_m}(s) = \mu_S(s)$

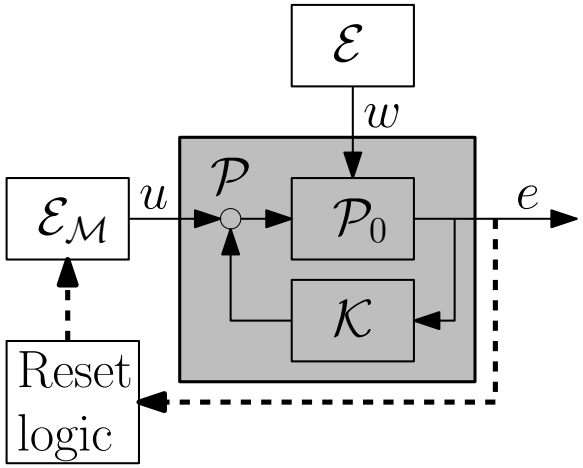

Assumptions

1. S is semi-simple with $\mathrm{spec}\,(S) = \{0,\ \pm\jmath\omega_1,\ \ldots,\ \pm\jmath\omega_r\}$
2. $\mathrm{spec}\,(A) \subset \mathbb{C}_g$
3. $\mathrm{rank}\begin{bmatrix} A - \jmath\omega_h & BF \\ C & DF \end{bmatrix} = n + p,\ h = 0, 1, \ldots, r$, satisfied by all (A, B, C, D)

External model - preliminary design

- LTI **exosystem** $\mathcal{E}$: $\dot{w} = Sw$
- LTI **plant** $\mathcal{P}$: $\begin{cases} \dot{x} = Ax + Bu + Pw, \\ e = Cx + Du + Qw \end{cases}$
- LTI **external model** $\mathcal{E}_{\mathcal{M}}$: $\begin{cases} \dot{x}_M = A_M x_M, & A_M = I_p \otimes A_m, \\ y_M = C_M x_M, & C_M = F(I_p \otimes C_m), \end{cases}$

  with (A_m, C_m) observable and $\mu_{A_m}(s) = \mu_S(s)$

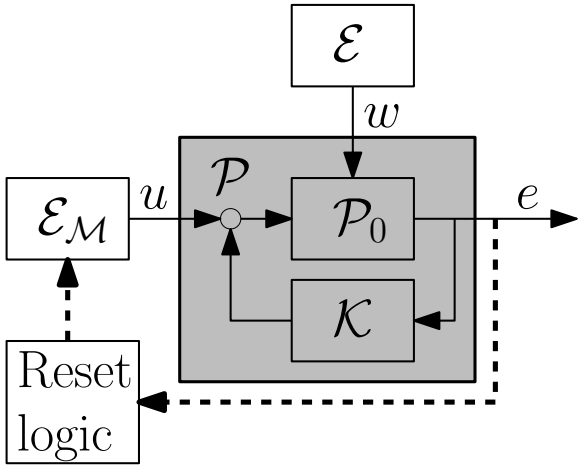

Ignoring the **Reset logic**:

- Well defined **steady-state solution:** $\begin{bmatrix} x_{ss} \\ u_{ss} \end{bmatrix} = \begin{bmatrix} \Pi_M \\ C_M \end{bmatrix} x_M + \begin{bmatrix} \Pi_w \\ 0 \end{bmatrix} w$

$$\Pi_M A_M = A\Pi_M + BC_M\,, \qquad \Pi_w S = A\Pi_w + P\,,$$

- **Steady-state error:** $e_{ss} = Mx_M + Nw$ where $M = C\Pi_M + DC_M$, $N = C\Pi_w + Q$
- $e \equiv 0$ iff $x_M(0) = \Psi w(0)$ with Ψ such that

$$\Psi S = A_M \Psi$$
$$0 = M\Psi + N$$

A coordinate transformation

- For the interconnection of $\mathcal{E}_{\mathcal{M}}$, $\mathcal{E}$ and $\mathcal{P}$, **change coordinates** to expose:
  - **the offset z between x and its steady-state value x_{ss}:** $z = x - \Pi_M x_M - \Pi_w w$
  - **the offset η between x_M and its ideal value Ψw:** $\eta = x_M - \Psi w$

A coordinate transformation

- For the interconnection of $\mathcal{E}_{\mathcal{M}}$, $\mathcal{E}$ and $\mathcal{P}$, **change coordinates** to expose:
  - **the offset z between x and its steady-state value x_{ss}:** $z = x - \Pi_M x_M - \Pi_w w$
  - **the offset η between x_M and its ideal value Ψw:** $\eta = x_M - \Psi w$
- It can be easily computed that $\begin{bmatrix} \dot{w} \\ \dot{z} \\ \dot{\eta} \\ e \end{bmatrix} = \begin{bmatrix} Sw \\ Az \\ A_M \eta \\ Cz + M\eta \end{bmatrix}$, since:

$$
\begin{aligned}
\dot{z} &= \dot{x} - \Pi_M \dot{x}_M - \Pi_w \dot{w} \\
&= (Ax + BC_M x_M + Pw) - \Pi_M A_M x_M - \Pi_w Sw \\
&= Az + (A\Pi_M + BC_M - \Pi_M A_M) x_M + (A\Pi_w + P - \Pi_w S) w = Az, \\
\dot{\eta} &= \dot{x}_M - \Psi \dot{w} \\
&= A_M x_M - \Psi S w \\
&= A_M \eta + (A_M \Psi - \Psi S) w = A_M \eta, \\
e &= \cdots = Cz + M\eta.
\end{aligned}
$$

A coordinate transformation

- For the interconnection of $\mathcal{E}_{\mathcal{M}}$, $\mathcal{E}$ and $\mathcal{P}$, **change coordinates** to expose:
  - **the offset z between x and its steady-state value x_{ss}:** $z = x - \Pi_M x_M - \Pi_w w$
  - **the offset η between x_M and its ideal value Ψw:** $\eta = x_M - \Psi w$
- It can be easily computed that $\begin{bmatrix} \dot{w} \\ \dot{z} \\ \dot{\eta} \\ e \end{bmatrix} = \begin{bmatrix} Sw \\ Az \\ A_M \eta \\ Cz + M\eta \end{bmatrix}$, since:

$$
\begin{aligned}
\dot{z} &= \dot{x} - \Pi_M \dot{x}_M - \Pi_w \dot{w} \\
&= (Ax + BC_M x_M + Pw) - \Pi_M A_M x_M - \Pi_w Sw \\
&= Az + (A\Pi_M + BC_M - \Pi_M A_M) x_M + (A\Pi_w + P - \Pi_w S) w = Az, \\
\dot{\eta} &= \dot{x}_M - \Psi \dot{w} \\
&= A_M x_M - \Psi S w \\
&= A_M \eta + (A_M \Psi - \Psi S) w = A_M \eta, \\
e &= \cdots = Cz + M\eta.
\end{aligned}
$$

- Hence, for t large enough, it holds that $e(t) \approx M\eta(t)$

Regulation **with a single reset** is achieved by **"inverting" this relation!**

Inverting the error relation, when M is known

- Let $T, \tau_0 \in \mathbb{R}_{>0}$ with $\tau_0 \ll T$, and $A_{MD} = e^{A_M T}$, $A_{MI} = e^{-A_M \tau_0}$, $A_D = e^{AT}$, $A_I = e^{-A\tau_0}$. For $h \in \mathbb{N}$, define the **extended error** $\hat{e}(t)$

$$\hat{e}(t) = \begin{bmatrix} e(t) \\ e(t-\tau_0) \\ \dots \\ e(t-h\tau_0) \end{bmatrix} = C_D z(t-T) + M_D \eta(t-T),$$

$$C_D := \begin{bmatrix} C \\ CA_I \\ \dots \\ CA_I^{h-1} \end{bmatrix} A_D, \quad M_D := \begin{bmatrix} M \\ MA_{MI} \\ \dots \\ MA_{MI}^{h-1} \end{bmatrix} A_{MD},$$

where $\lim_{T\to+\infty} A_D = \lim_{T\to+\infty} e^{AT} = 0$ and $\lim_{T\to+\infty} C_D = 0$

Inverting the error relation, when M is known

- Let $T, \tau_0 \in \mathbb{R}_{>0}$ with $\tau_0 \ll T$, and $A_{MD} = e^{A_M T}$, $A_{MI} = e^{-A_M \tau_0}$, $A_D = e^{AT}$, $A_I = e^{-A\tau_0}$. For $h \in \mathbb{N}$, define the **extended error** $\hat{e}(t)$

$$\hat{e}(t) = \begin{bmatrix} e(t) \\ e(t-\tau_0) \\ \dots \\ e(t-h\tau_0) \end{bmatrix} = C_D z(t-T) + M_D \eta(t-T),$$

$$C_D := \begin{bmatrix} C \\ CA_I \\ \dots \\ CA_I^{h-1} \end{bmatrix} A_D, \quad M_D := \begin{bmatrix} M \\ MA_{MI} \\ \dots \\ MA_{MI}^{h-1} \end{bmatrix} A_{MD},$$

  where $\lim_{T\to+\infty} A_D = \lim_{T\to+\infty} e^{AT} = 0$ and $\lim_{T\to+\infty} C_D = 0$
- Large T and $t > T$ imply $\hat{e}(t) \approx M_D \eta(t-T)$ with M_D left invertible, so that

$$\eta(t-T) \approx M_D^{\sharp} \hat{e}(t), \quad \eta(t) \approx A_{MD}\eta(t-T)$$

Inverting the error relation, when M is known

- Let $T, \tau_0 \in \mathbb{R}_{>0}$ with $\tau_0 \ll T$, and $A_{MD} = e^{A_M T}$, $A_{MI} = e^{-A_M \tau_0}$, $A_D = e^{AT}$, $A_I = e^{-A\tau_0}$. For $h \in \mathbb{N}$, define the **extended error** $\hat{e}(t)$

$$\hat{e}(t) = \begin{bmatrix} e(t) \\ e(t-\tau_0) \\ \dots \\ e(t-h\tau_0) \end{bmatrix} = C_D z(t-T) + M_D \eta(t-T),$$

$$C_D := \begin{bmatrix} C \\ CA_I \\ \dots \\ CA_I^{h-1} \end{bmatrix} A_D, \quad M_D := \begin{bmatrix} M \\ MA_{MI} \\ \dots \\ MA_{MI}^{h-1} \end{bmatrix} A_{MD},$$

where $\lim_{T\to+\infty} A_D = \lim_{T\to+\infty} e^{AT} = 0$ and $\lim_{T\to+\infty} C_D = 0$

- Large T and $t > T$ imply $\hat{e}(t) \approx M_D \eta(t-T)$ with M_D left invertible, so that

$$\eta(t-T) \approx M_D^\sharp \hat{e}(t), \quad \eta(t) \approx A_{MD}\eta(t-T)$$

- Reset $x_M(t^+) := x_M(t^-) - A_{MD} M_D^\sharp \hat{e}(t)$ to achieve $x_M(t^+) \approx \Psi w(t)$ since

$$x_M(t^+) \approx x_M(t^-) - \eta(t^-) = x_M(t^-) - (x_M(t^-) + \Psi w(t)) = \Psi w(t)$$

A single reset yields **practical** regulation, for **known** M

Asymptotic regulation with M unknown

- Let $\eta_{[k]} = \eta(kT)$, $\eta_{\langle k \rangle} = \eta(kT^-)$, etc
- Define the reset rule for x_M as

$$x_{M,[k]} = x_{M,\langle k \rangle} + L\hat{e}_{\langle k \rangle}, \text{ where } \hat{e}_{\langle k \rangle} = C_D z_{[k-1]} + M_D \eta_{[k-1]}$$

- It can be shown that

$$\begin{bmatrix} z_{[k+1]} \\ \eta_{[k+1]} \end{bmatrix} = \begin{bmatrix} A_D - \Pi_M L C_D & -\Pi_M L M_D \\ L C_D & A_{MD} + L M_D \end{bmatrix} \begin{bmatrix} z_{[k]} \\ \eta_{[k]} \end{bmatrix} \tag{1}$$

where $\lim_{T \to +\infty} A_D = 0$ and $\lim_{T \to +\infty} C_D = 0$

Asymptotic regulation with M unknown

- Let $\eta_{[k]} = \eta(kT)$, $\eta_{\langle k \rangle} = \eta(kT^-)$, etc
- Define the reset rule for x_M as

$$x_{M,[k]} = x_{M,\langle k \rangle} + L\hat{e}_{\langle k \rangle}, \text{ where } \hat{e}_{\langle k \rangle} = C_D z_{[k-1]} + M_D \eta_{[k-1]}$$

- It can be shown that

$$\begin{bmatrix} z_{[k+1]} \\ \eta_{[k+1]} \end{bmatrix} = \begin{bmatrix} A_D - \Pi_M L C_D & -\Pi_M L M_D \\ L C_D & A_{MD} + L M_D \end{bmatrix} \begin{bmatrix} z_{[k]} \\ \eta_{[k]} \end{bmatrix} \tag{1}$$

where $\lim_{T \to +\infty} A_D = 0$ and $\lim_{T \to +\infty} C_D = 0$

Proposition

- As $T \to +\infty$, the spectrum of the matrix in (1) approaches the set $\{0\} \cup \mathrm{spec}\,(A_{MD} + LM_D)$
- Moreover, let $\hat{M}_D$ be such that $\lim_{T \to +\infty}(\hat{M}_D - M_D) = 0$. If L is such that $(A_{MD} + L\hat{M}_D)$ is Schur, then there exists $T_1^* > 0$ such that for any $T > T_1^*$ the equilibrium $(z_{eq}, \eta_{eq}) = (0, 0)$ of (1) is globally exponentially stable.

A **periodic** reset yields **asymptotic** regulation, for **unknown** M

Estimating M (when w is not there)

- Consider a **scalar input** u, the system $\begin{cases} \dot{x} = Ax + Bu, \\ \bar{e} = Cx + Du, \end{cases}$ and $\begin{cases} \dot{x}_m = A_m x_m, \\ y_m = C_m x_m = u, \end{cases}$
- Choose $\tau_1 > 0$ such that $\tau_1 \neq \dfrac{2\pi}{\omega_i - \omega_j}$, $\forall i, j \in \{0, 1, \ldots, r\}$, where $\omega_0 = 0$
- Choose $z \in \mathbb{N}$, $z \geq q$ and define

$$
\begin{aligned}
M_a(t) &:= \begin{bmatrix} \bar{e}(t) & \bar{e}(t-\tau_1) & \bar{e}(t-2\tau_1) & \cdots & \bar{e}(t-z\tau_1) \end{bmatrix}, \\
\dot{M}_b(t) &:= A_m M_b(t), \\
M_b(0) &:= \begin{bmatrix} x_{m0} & \tilde{A}_m^{-1} x_{m0} & \tilde{A}_m^{-2} x_{m0} & \cdots & \tilde{A}_m^{-z} x_{m0} \end{bmatrix}, \\
\hat{M}(t) &:= M_a(t) M_b^{\sharp}(t),
\end{aligned}
$$

  where $\tilde{A}_m := e^{A_m \tau_1}$ and x_{m0} is such that (A_m, x_{m0}) is reachable
- Recalling that $z := x - x_{ss}$, it is easy to see that

$$
\begin{aligned}
M_b(t) &= \begin{bmatrix} x_m(t) & x_m(t-\tau_1) & x_m(t-2\tau_1) & \cdots & x_m(t-z\tau_1) \end{bmatrix} \\
M_a(t) &= M M_b(t) + C \begin{bmatrix} z(t) & z(t-\tau_1) & z(t-2\tau_1) & \cdots & z(t-z\tau_1) \end{bmatrix}
\end{aligned}
$$

Estimating M (when w is not there)

- Consider a **scalar input** u, the system $\begin{cases} \dot{x} = Ax + Bu, \\ \bar{e} = Cx + Du, \end{cases}$ and $\begin{cases} \dot{x}_m = A_m x_m, \\ y_m = C_m x_m = u, \end{cases}$
- Choose $\tau_1 > 0$ such that $\tau_1 \neq \dfrac{2\pi}{\omega_i - \omega_j}$, $\forall i, j \in \{0, 1, \ldots, r\}$, where $\omega_0 = 0$
- Choose $z \in \mathbb{N}$, $z \geq q$ and define

$$\begin{aligned} M_a(t) &:= \begin{bmatrix} \bar{e}(t) & \bar{e}(t-\tau_1) & \bar{e}(t-2\tau_1) & \cdots & \bar{e}(t-z\tau_1) \end{bmatrix}, \\ \dot{M}_b(t) &:= A_m M_b(t), \\ M_b(0) &:= \begin{bmatrix} x_{m0} & \tilde{A}_m^{-1} x_{m0} & \tilde{A}_m^{-2} x_{m0} & \cdots & \tilde{A}_m^{-z} x_{m0} \end{bmatrix}, \\ \hat{M}(t) &:= M_a(t) M_b^{\sharp}(t), \end{aligned}$$

  where $\tilde{A}_m := e^{A_m \tau_1}$ and x_{m0} is such that (A_m, x_{m0}) is reachable
- Recalling that $z := x - x_{ss}$, it is easy to see that

$$\begin{aligned} M_b(t) &= \begin{bmatrix} x_m(t) & x_m(t-\tau_1) & x_m(t-2\tau_1) & \cdots & x_m(t-z\tau_1) \end{bmatrix} \\ M_a(t) &= M M_b(t) + C \begin{bmatrix} z(t) & z(t-\tau_1) & z(t-2\tau_1) & \cdots & z(t-z\tau_1) \end{bmatrix} \end{aligned}$$

Proposition

For any $\varepsilon_M > 0$ there exists $T_3^* > 0$ such that if $T > T_3^*$ then $\hat{M}(T) - M$ has norm less than ε_M.

If u is not scalar, M **is computed iteratively** (columnwise)

Offsetting the disturbance

Original plant and exosystem

$$\begin{cases} \dot{w} = Sw, \\ \dot{x} = Ax + Bu + Pw, \\ e = Cx + Du + Qw, \end{cases}$$

Equivalent plant and exosystem

$$\begin{cases} \dot{w} = Sw, & S = I_p \otimes A_m, \\ \dot{x} = Ax + Bu, & P = 0, \\ e = Cx + Du + Qw, & Q = I_p \otimes C_m, \end{cases}$$

- The steady-state of e for $u \equiv 0$ is "matched" by the **equivalent output disturbance generator:**

$$\begin{aligned} &\dot{x}_{ed}(t) = A_{ed}x_{ed}(t) + \delta(t)L_{ed}(e(t) - \check{e}(t)),\ A_{ed} = I_p \otimes A_m,\ L_{ed} = I_p \otimes L_m, \\ &\check{e}(t) = C_{ed}x_{ed}(t),\ C_{ed} = I_p \otimes C_m, \\ &L_m : \operatorname{spec}(A_m - L_m C_m) \subset \mathbb{C}_g,\ \text{[chosen for fast decay of the estimation error]} \\ &\delta(t) = \begin{cases} 0, & \text{if } \max_{t\in[t-T,t]} |e(t) - \check{e}(t)| < \varepsilon_\nu, \\ 1, & \text{otherwise,} \end{cases} \end{aligned}$$

- Generate the "(almost) disturbance free" output as $\bar{e} = e - \check{e}$

Offsetting the disturbance

Original plant and exosystem

$$\begin{cases} \dot{w} = Sw, \\ \dot{x} = Ax + Bu + Pw, \\ e = Cx + Du + Qw, \end{cases}$$

Equivalent plant and exosystem

$$\begin{cases} \dot{w} = Sw, & S = I_p \otimes A_m, \\ \dot{x} = Ax + Bu, & P = 0, \\ e = Cx + Du + Qw, & Q = I_p \otimes C_m, \end{cases}$$

- The steady-state of e for $u \equiv 0$ is "matched" by the **equivalent output disturbance generator:**

$$\begin{aligned} &\dot{x}_{ed}(t) = A_{ed}x_{ed}(t) + \delta(t)L_{ed}(e(t) - \check{e}(t)),\ A_{ed} = I_p \otimes A_m,\ L_{ed} = I_p \otimes L_m, \\ &\check{e}(t) = C_{ed}x_{ed}(t),\ C_{ed} = I_p \otimes C_m, \\ &L_m : \operatorname{spec}(A_m - L_m C_m) \subset \mathbb{C}_g,\ \text{[chosen for fast decay of the estimation error]} \\ &\delta(t) = \begin{cases} 0, & \text{if } \max_{t\in[t-T,t]} |e(t) - \check{e}(t)| < \varepsilon_\nu, \\ 1, & \text{otherwise,} \end{cases} \end{aligned}$$

- Generate the "(almost) disturbance free" output as $\bar{e} = e - \check{e}$

Proposition

For any $\varepsilon_\nu > 0$ there exist $T_2^* > 0$ such that $T > T_2^*$ implies $|e(t) - \check{e}(t)| < \varepsilon_\nu$, for all $t \geq T$.

Section 3

An example for the non hybrid case

A numerical example: data

- Consider the plant described by the matrices:

$$A = \begin{bmatrix} -2 & 1 & 0 \\ -1 & -2 & 0 \\ -2 & 0 & -1 \end{bmatrix}, \qquad B = \begin{bmatrix} 1 & 0 \\ 0 & 1 \\ 0 & 1 \end{bmatrix},$$

$$C = \begin{bmatrix} 1 & 0 & 1 \\ 1 & -1 & 0 \end{bmatrix}, \qquad D = \begin{bmatrix} 0 & 0 \\ 0 & 0 \end{bmatrix},$$

$$P = \begin{bmatrix} 1 & 0 & 1 & 0 & 1 \\ 0 & 0 & 0 & 0 & 0 \\ -3 & 0 & -3 & 0 & -3 \end{bmatrix}, \qquad Q = \begin{bmatrix} 2 & 0 & 1 & 0 & 1 \\ 1 & -1 & 0 & 0 & 0 \end{bmatrix},$$

- The exosystem is characterized by $\omega_0 = 0$, $\omega_1 = \dfrac{\pi}{4}$, $\omega_2 = \dfrac{3\pi}{5}$ and initial state $q(0) = \begin{bmatrix} -1 & 0 & 1 & -1 & 0 \end{bmatrix}'$.
- **None of these plant data is used for control design,** except the values ω_h, $h = 0, 1, 2$.

A numerical example: practical regulation

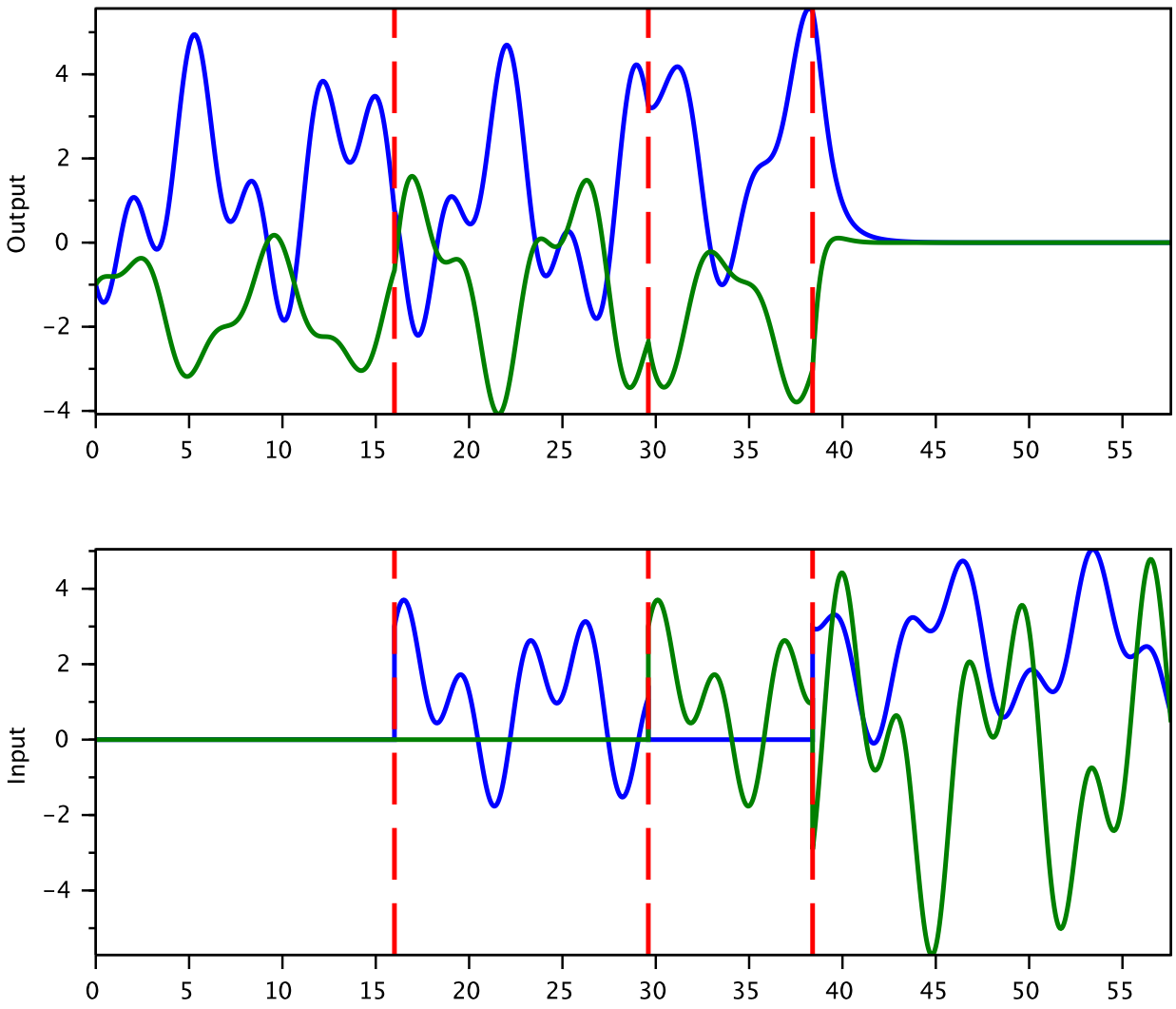

Two Inputs, Two Outputs case with $\varepsilon = 10^{-4}$.
Evolution of the two regulated outputs (top) and control inputs (bottom).

A numerical example: practical regulation

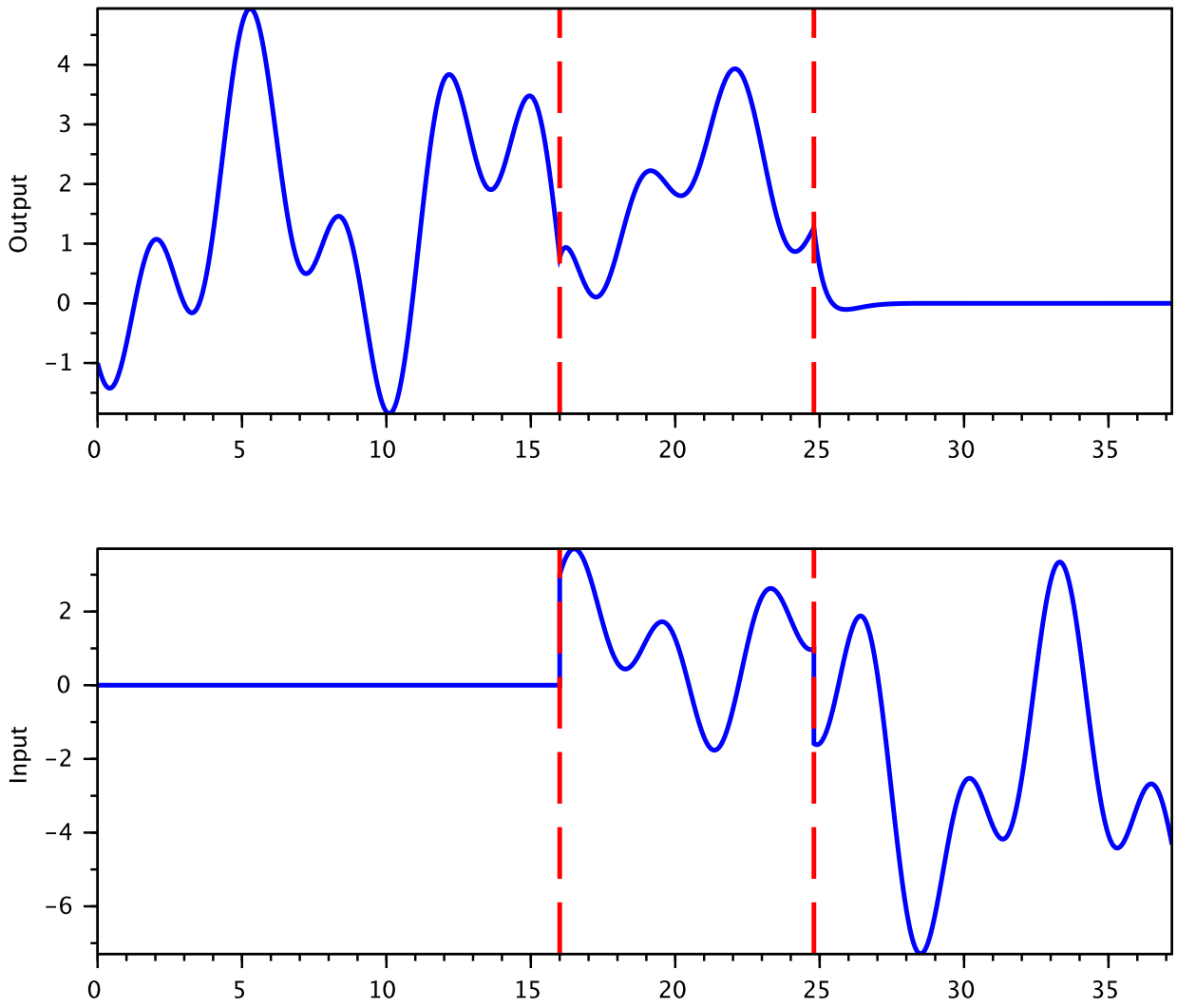

Single Input, Single Output case with $\varepsilon = 10^{-4}$.
Evolution of the first regulated output e_1 (top) and first control input u_1 (bottom).

A numerical example: practical regulation

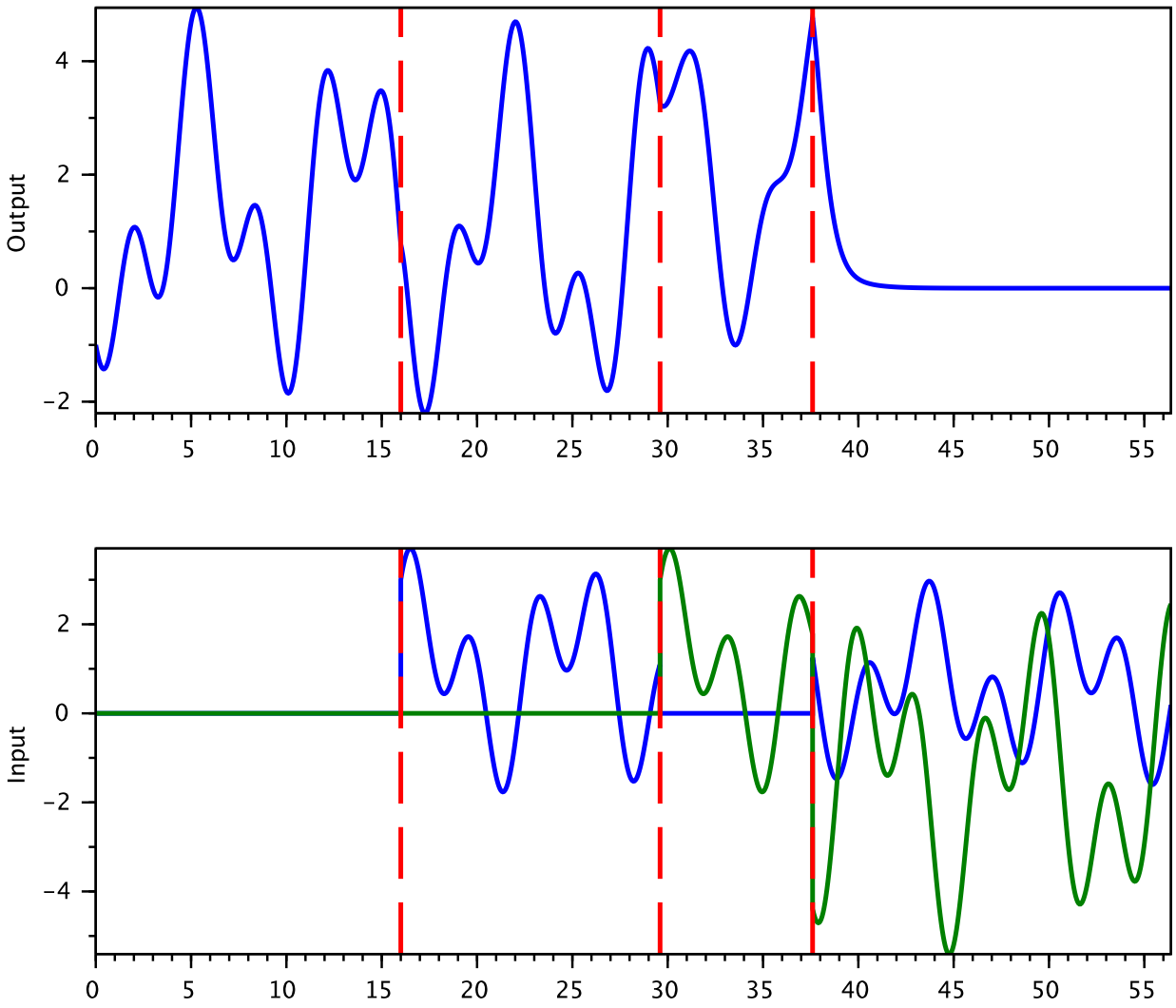

Two Inputs, Single Output case with $\varepsilon = 10^{-4}$.
Evolution of the first regulated output e_1 (top) and two control inputs (bottom).
Smaller input amplitudes are used (with respect to the SISO case).

A numerical example: asymptotic regulation

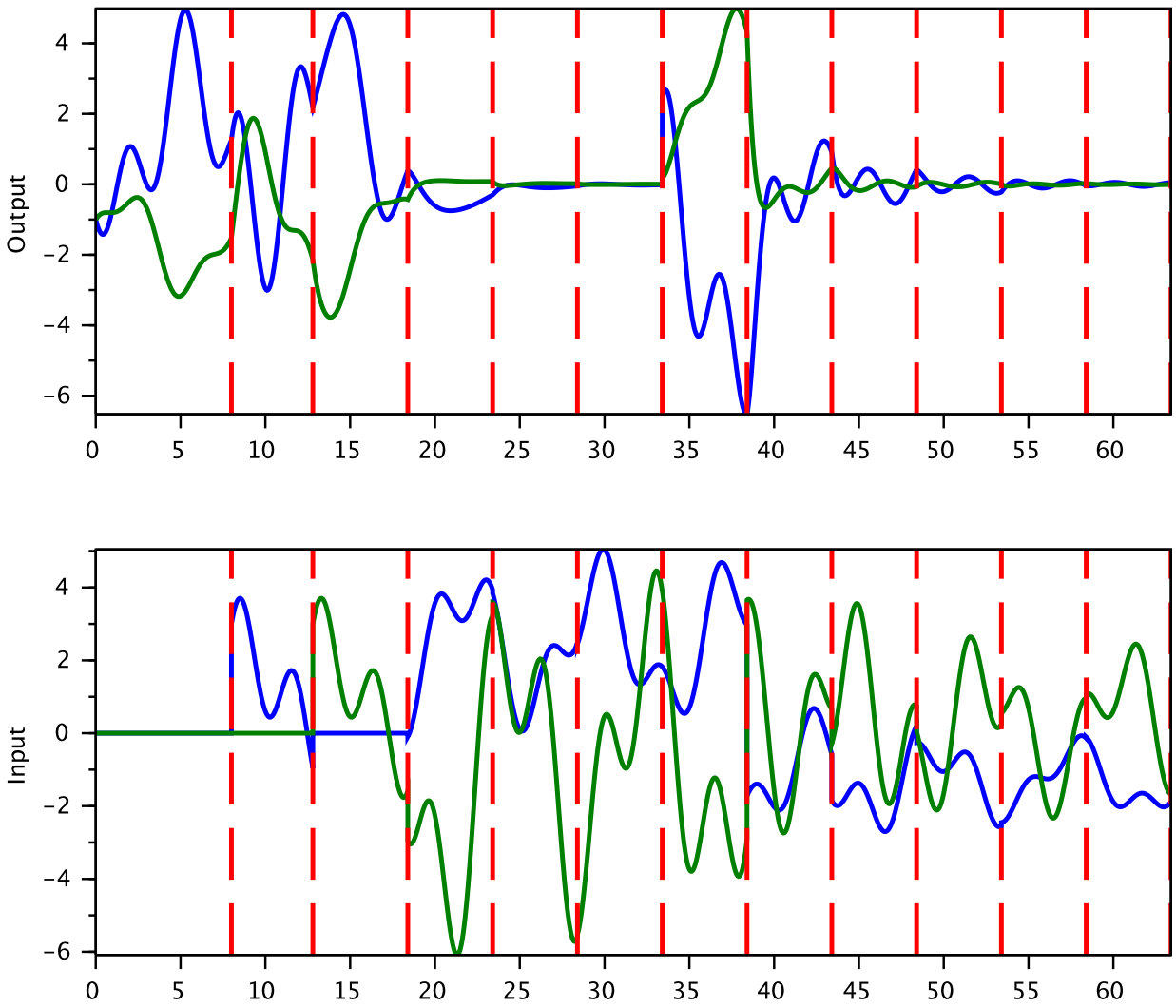

Asymptotic regulation via periodic resets with $\varepsilon = 0.5$.
Evolution of the regulated output e (top) and control input u (bottom).
The state of the exosystem is reset after 38 time units.

Conclusions

- Still lots of interesting (and fun!) things going on in **linear** regulation
- Data-driven external model based for hybrid output regulation: in CDC2016
- Hybrid output regulation still largely to understand even in very simple cases